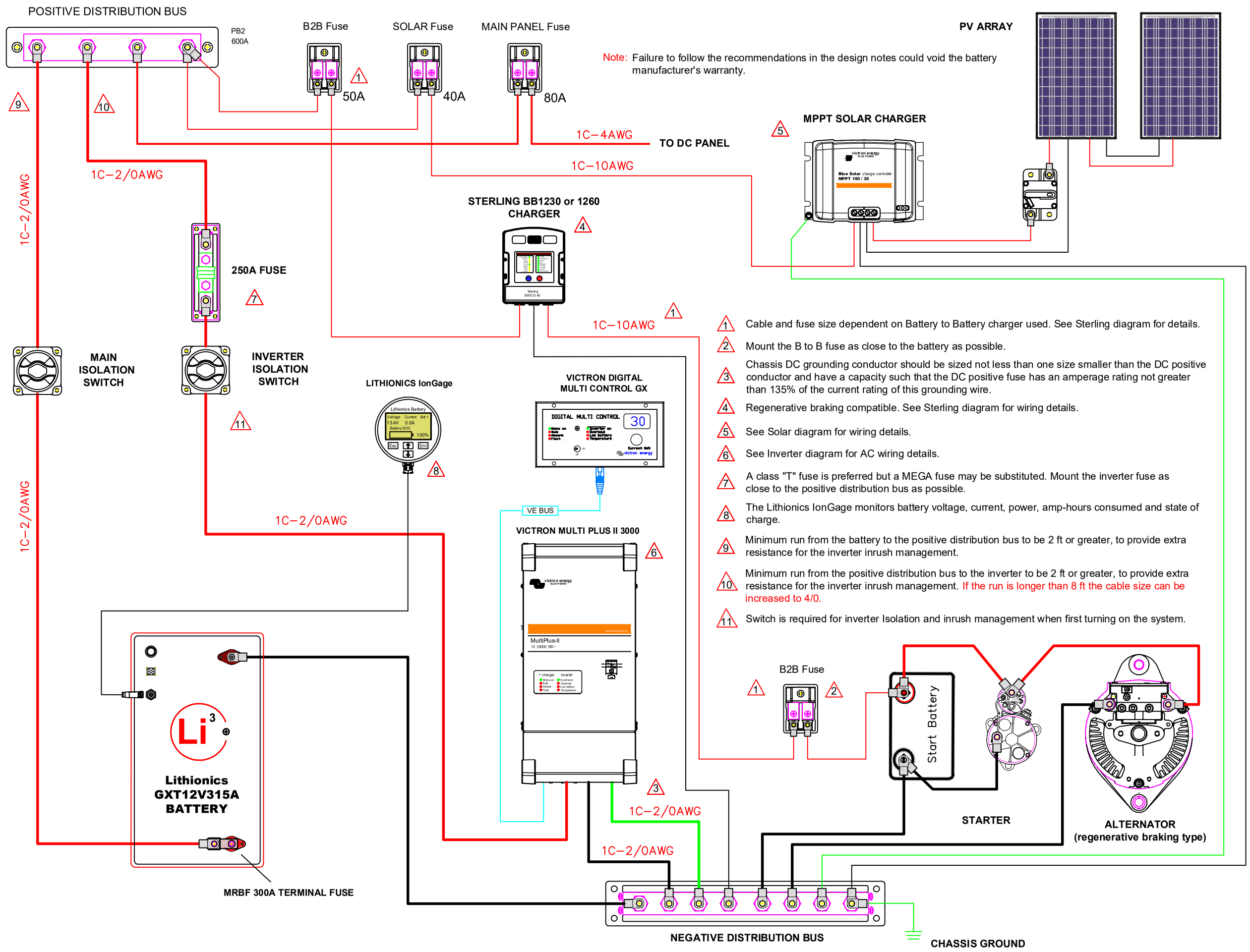

1. Cable and fuse size dependent on Battery to Battery charger used. See Sterling diagram for details.
2. Mount the B to B fuse as close to the battery as possible.
3. Chassis DC grounding conductor should be sized not less than one size smaller than the DC positive conductor and have a capacity such that the DC positive fuse has an amperage rating not greater than 135% of the current rating of this grounding wire.
4. Regenerative braking compatible. See Sterling diagram for wiring details.
5. See Solar diagram for wiring details.
6. See Inverter diagram for AC wiring details.
7. A class "T" fuse is preferred but a MEGA fuse may be substituted. Mount the inverter fuse as close to the positive distribution bus as possible.
8. The Lithionics IonGage monitors battery voltage, current, power, amp-hours consumed and state of charge.
9. Minimum run from the battery to the positive distribution bus to be 2 ft or greater, to provide extra resistance for the inverter inrush management.
10. Minimum run from the positive distribution bus to the inverter to be 2 ft or greater, to provide extra resistance for the inverter inrush management. If the run is longer than 8 ft the cable size can be increased to 4/0.
11. Switch is required for inverter Isolation and inrush management when first turning on the system.

NO.	DATE	REVISION	BY

DWG TITLE

ENGINEER | CHECKED BY
JOB NO | DRAWN BY James Turnbull
SCALE No Scale | DATE
DWG NO Lithionics 315 Rev. 05 (Main diagram)
SHEET NO OF