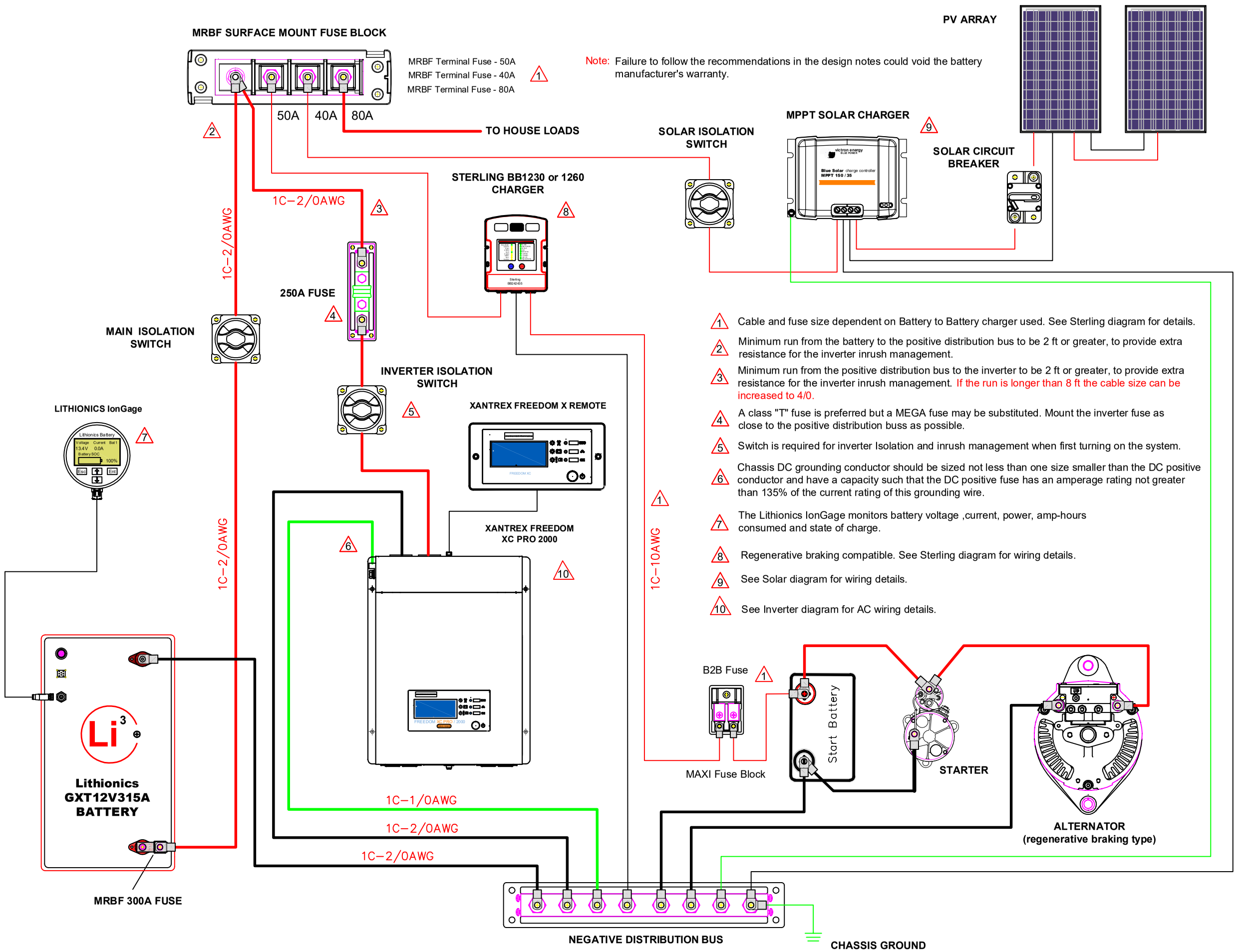

Note: Failure to follow the recommendations in the design notes could void the battery manufacturer's warranty.

1. Cable and fuse size dependent on Battery to Battery charger used. See Sterling diagram for details.
2. Minimum run from the battery to the positive distribution bus to be 2 ft or greater, to provide extra resistance for the inverter inrush management.
3. Minimum run from the positive distribution bus to the inverter to be 2 ft or greater, to provide extra resistance for the inverter inrush management. If the run is longer than 8 ft the cable size can be increased to 4/0.
4. A class "T" fuse is preferred but a MEGA fuse may be substituted. Mount the inverter fuse as close to the positive distribution buss as possible.
5. Switch is required for inverter Isolation and inrush management when first turning on the system.
6. Chassis DC grounding conductor should be sized not less than one size smaller than the DC positive conductor and have a capacity such that the DC positive fuse has an amperage rating not greater than 135% of the current rating of this grounding wire.
7. The Lithionics IonGage monitors battery voltage ,current, power, amp-hours consumed and state of charge.
8. Regenerative braking compatible. See Sterling diagram for wiring details.
9. See Solar diagram for wiring details.
10. See Inverter diagram for AC wiring details.

NO.	DATE	REVISION	BY

DWG TITLE

ENGINEER | CHECKED BY

JOB NO | DRAWN BY James Turnbull

SCALE No Scale | DATE

DWG NO Lithionics 315 Rev 05 (Main diagram)

SHEET NO OF

CAD DWG FILE